INSTALLATION INSTRUCTIONS

CONCORD EDGE ON TWIN BAND OPENERS

2110 Park Avenue Brandon, Manitoba, Canada R7B 0R9
Website: www.atomjet.com
Email: agriculture@atomjet.com
Phone: 1.204.728.8590
Fax: 1.204.726.5734
Toll Free: 1.800.573.5048

18/04/2022

IMPORTANT WARRANTY/GUARANTEE INFORMATION

DO NOT DESTROY

Any claims under the guarantee must be COMPLETED BY OCTOBER 31 IN THE YEAR OF PURCHASE to qualify for a full refund. To satisfy a claim, Atom-Jet Industries must be given the opportunity during the seeding season to rectify the problem or issue, if NOT THE GUARANTEE IS NULL AND VOID. Wear under normal use is not covered by warranty/guarantee.

To activate your warranty registration, scan this QR code using the application on your mobile device and fill out the online form. Upon receipt of the completed form, we will send you a free pair of Atom-Jet work gloves.

WARRANTY IS TO BE COMPLETED BY OCTOBER 31 IN THE YEAR OF PURCHASE. The openers will either be Replaced or Repaired during this period. If you need to return an opener for warranty, please enclose your name, the farm name, address, phone number with area code, dealer purchased from, number of openers purchased, and the date of purchase. Please enclose copy of original invoice. Inclusion of the information will significantly speed up your warranty claim.

Get a GOOD START

" IF SEEDING ISN'T DONE RIGHT, NOTHING ELSE MATTERS."

Opener Installation

Bolt openers to the shank using the provided ½” X 2 ½” bolts and lock nuts. Install the spacer shank between the opener and the shank. Mount the opener with the seed port pointed to the center of the drill (see Figure 2).

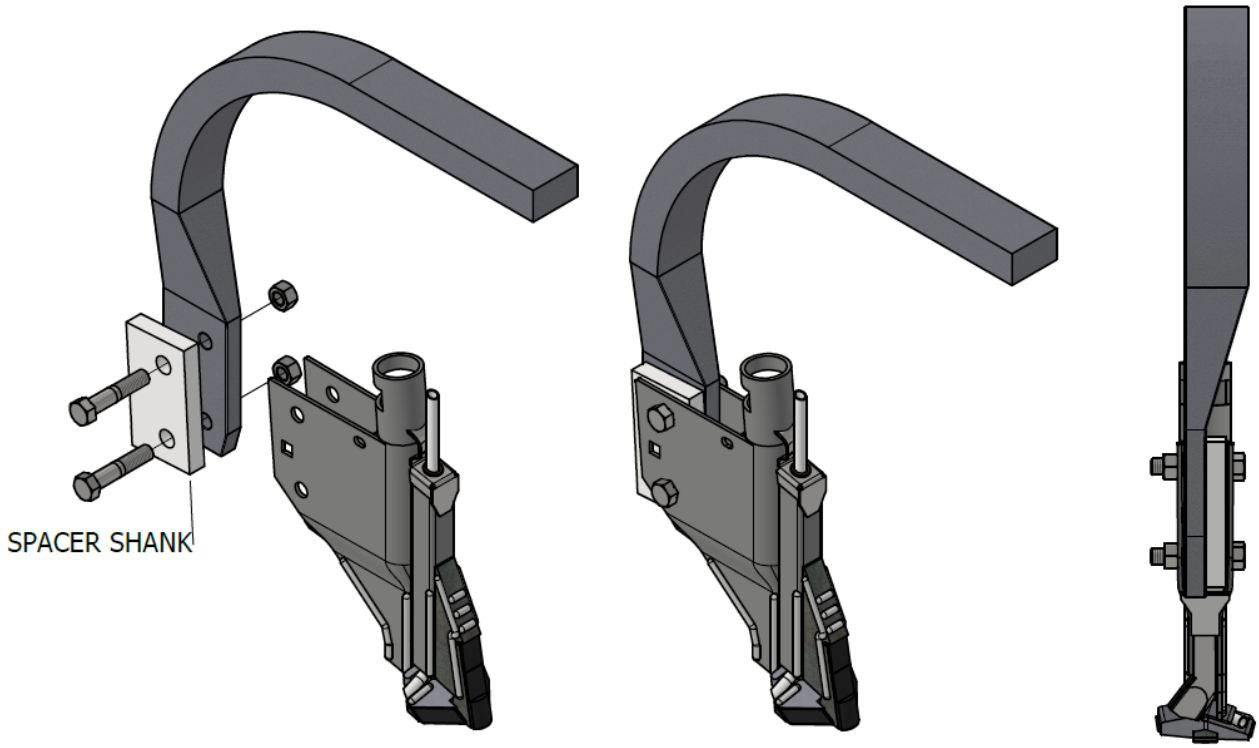

Figure 1: Bolt opener to shank

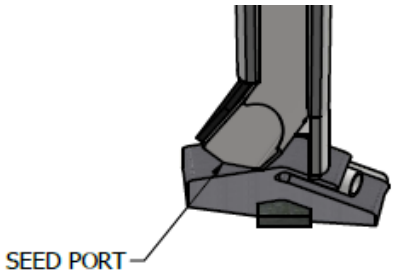

Figure 2: Seed port for "left" opener

Mounting your openers on the correct side of the drill will reduce the chances of plugging while turning with the drill in the ground. A “left” opener will have the seed port pointed to the left when viewed from the back. In Figure 3, the arrows represent the direction of the seed port.

Right opener is mounted on the left side of the drill

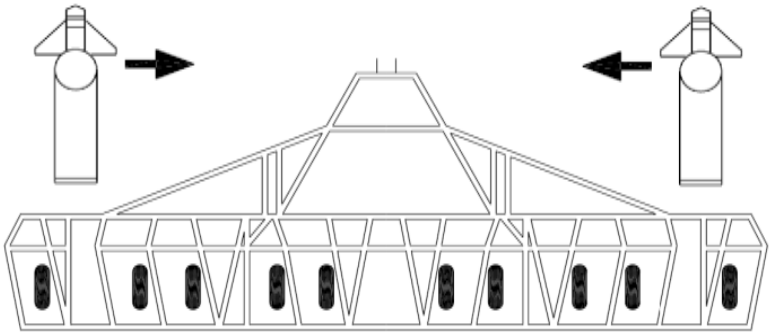

Left opener is mounted on the right side of the drill

Figure 3: Opener orientation

Twin Band Hose Installation

If you are using a single shoot seed and dry set up, follow these steps:

1) Install the opener top with provided ¼" x 2 ¼" bolt and locknut. DO NOT REMOVE knock outs.
2) Insert the dry hose to where the opener narrows. Secure with the #20 hose clamp.

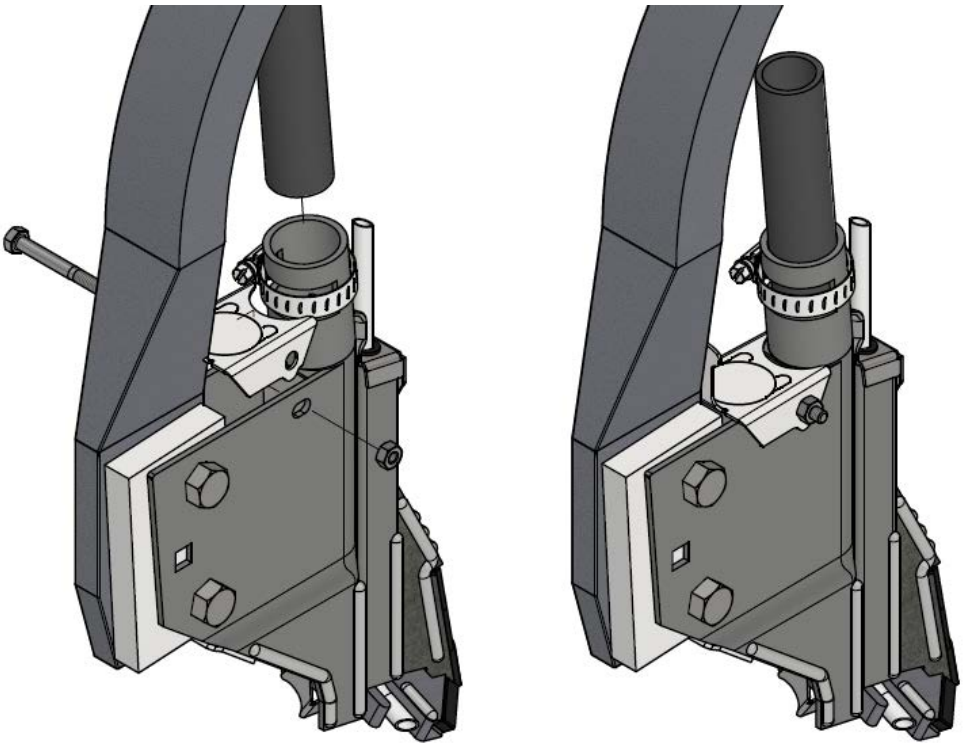

Figure 4: Install dry tube for single shoot set up

If you are using a double shoot seed and dry set up, follow these steps:

1) Install the opener top with the provided ¼” x 2 ¼” bolt and lock nut. Remove the large knock out.
2) Insert the dry hoses to where the opener narrows. Secure with #20 hose clamps.

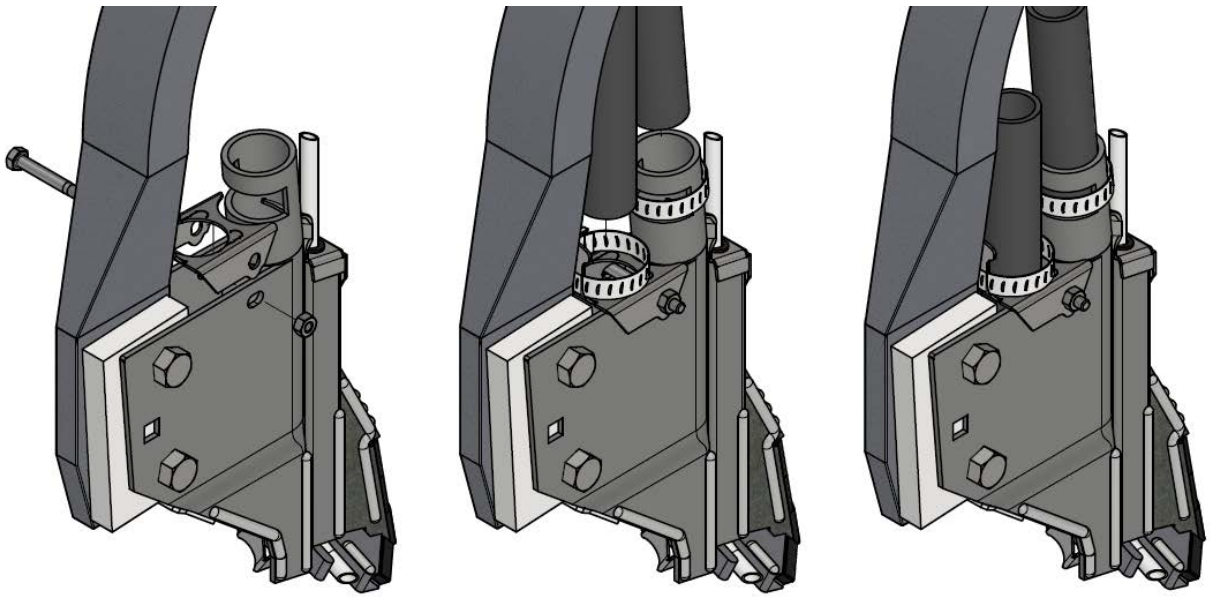

Figure 5: Install tubes for double shoot dry set up

Our openers are designed to allow hoses of different diameters. Hose bushings will be required for ¾” ID hoses. Short pieces of delivery hose sliced vertically and slipped over the delivery hose make good bushings. If desired, a bushing can be purchased through Atom-Jet: part OP-CB15 TUBE SPACER.

NH3 Line Installation

Install the NH3 line based on the size of hose on the tool. This instruction set gives installation steps for tube sizes of ⅜″, ½″, ¼″, and for MaxQuip systems.

⅜″ Hose Installation

Slide the line directly over the stainless steel tube and secure with the #6 hose clamp.

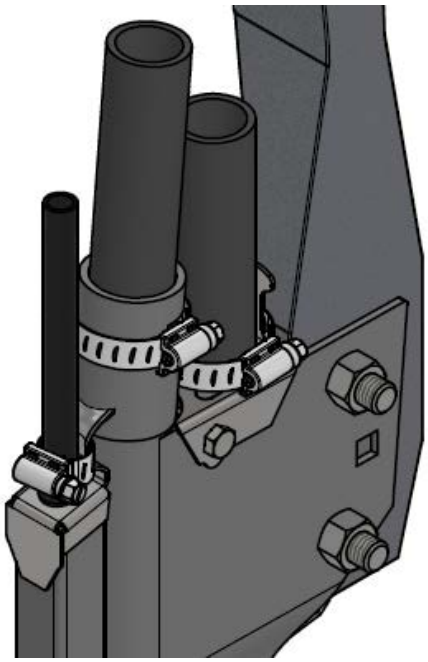

Figure 6: Install ⅜" NH3 line

½” Hose Installation

Slide the supplied sleeve over the stainless steel tube and then slide the ½” line over the sleeve. Secure with the #6 hose clamp.

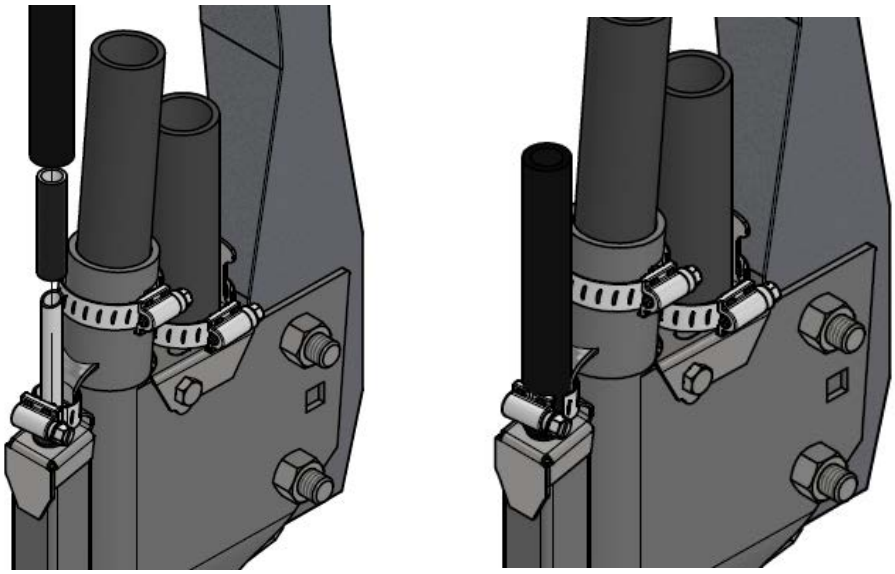

Figure 7: Install ½” NH3 line

¼” Hose Installation

Insert the ¼” OD hose through 2” of underground quality heat shrink. Then push the ¼” NH3 tube through the stainless steel NH3 tube until it reaches the bottom end of the tube.

Using a torch (not a heat gun), warm up the heat shrink to seal the point where the ¼” NH3 tube enters the stainless steel tube. Be careful not to overheat the NH3 tube to the point where the heat shrink collapses the tube.

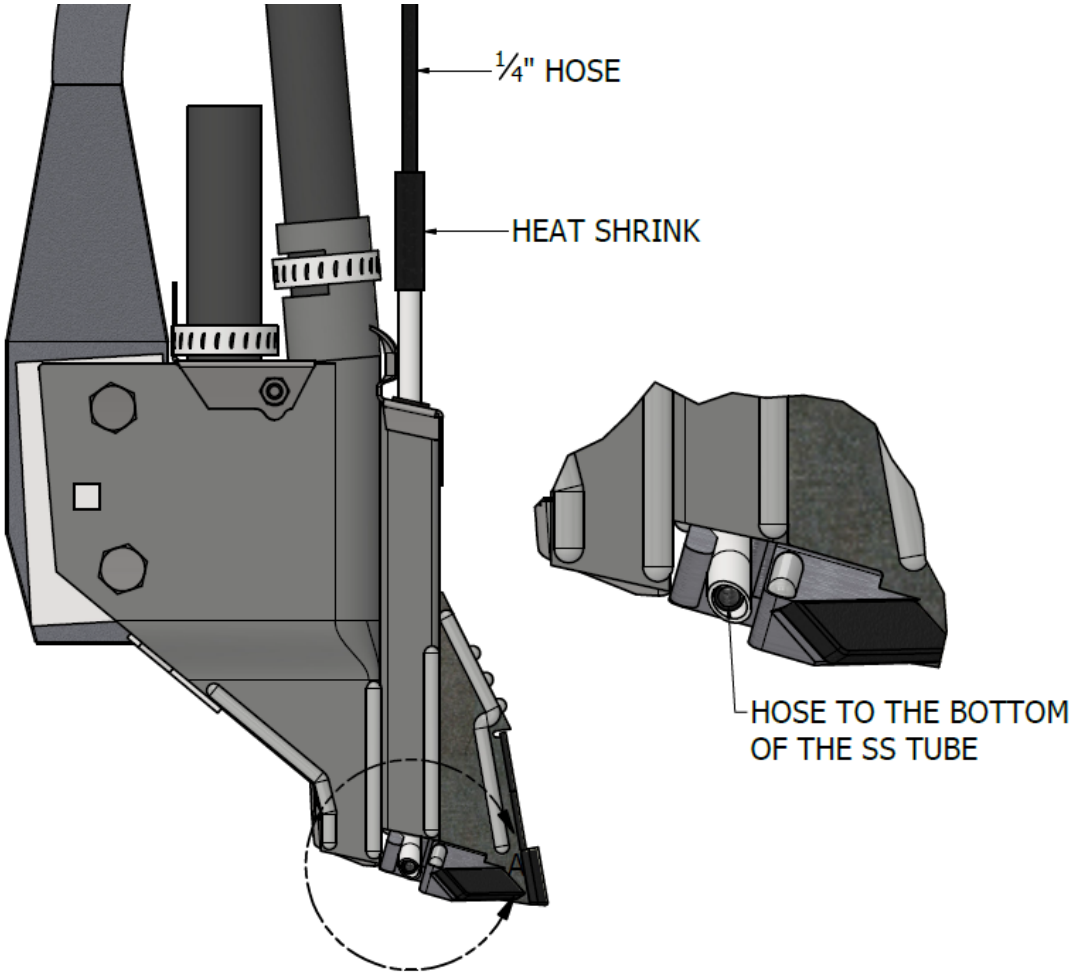

Figure 8: Install ¼” NH3 line

The heat shrink can be loosened on the stainless steel tube by turning it with a pair of pliers. It can be removed if an opener change is required.

Slide a short piece of ½” NH3 tube (approximately 24”, not supplied) over the heat shrink to provide protection for the ¼” line. Secure the protective tube to the opener with the supplied hose clamp.

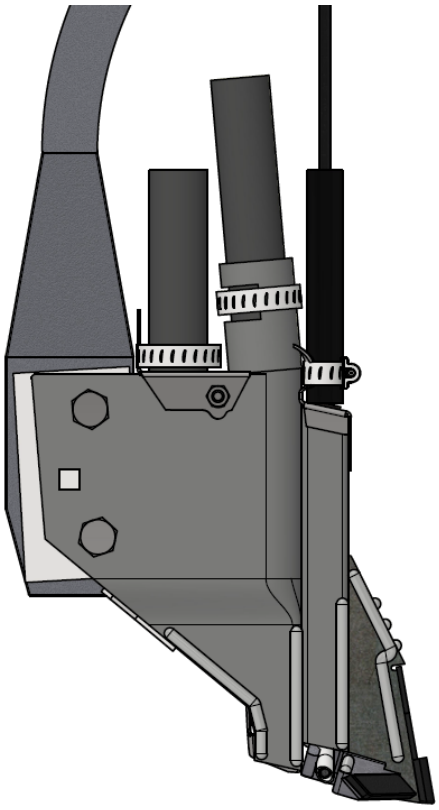

Figure 9: Installed protective tube

MaxQuip System Installation

1) Insert the MaxQuip line through the hose crimp and slide over small MaxQuip tube.
2) Crimp the line to MaxQuip tube with crimping tool (Tool and crimps available through MaxQuip).

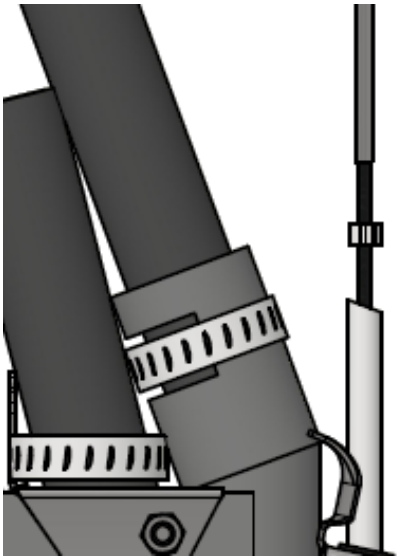

Figure 10: Install MaxQuip NH3 line

3) Slide the ½” protective NH3 tube (not supplied) over MaxQuip connection.
4) Open the #6 hose clamp and wrap around both the stainless steel cap, the hose, and the protective cover to the opener.

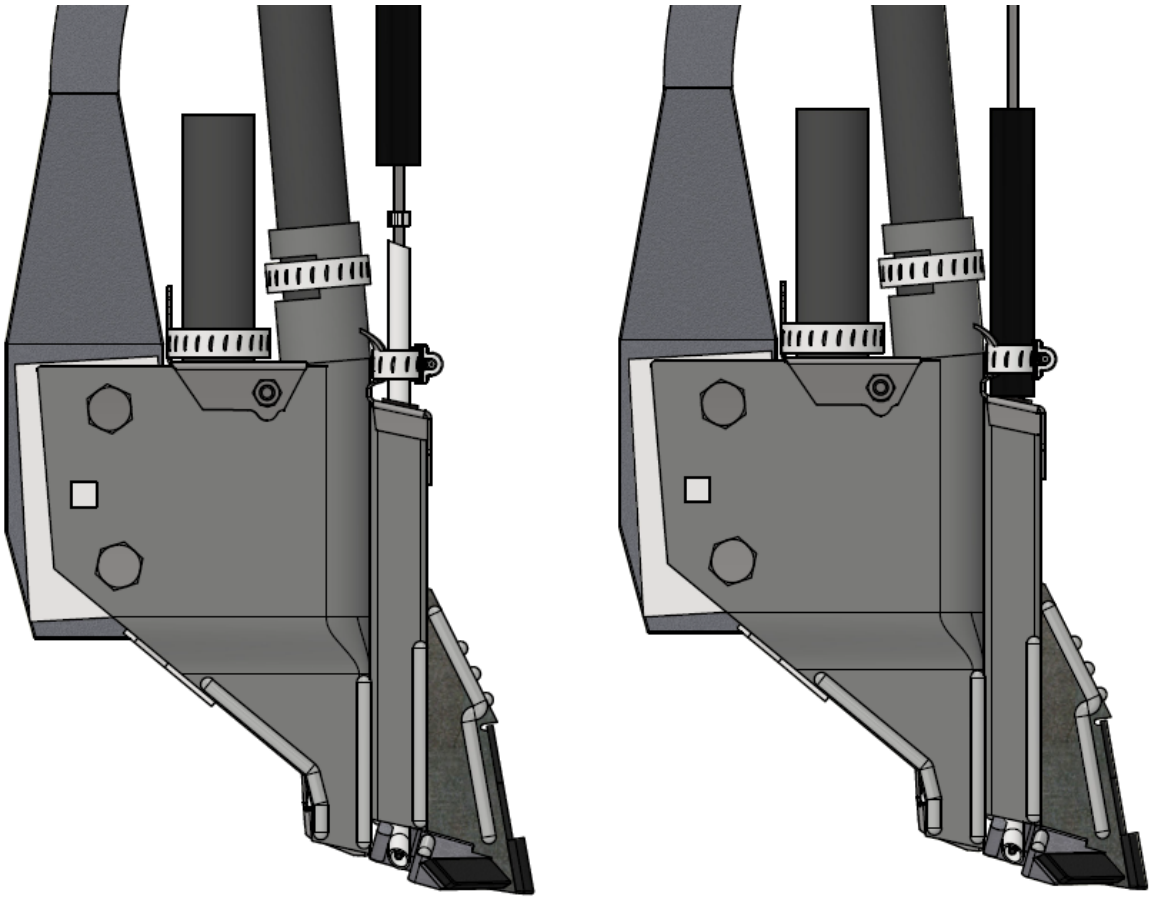

Figure 11: Install protective cover over MaxQuip line

Opener Maintenance

Atom-Jet openers are designed to be tough, durable, and reliable in all soil conditions. To extend the life of your openers even further, follow these steps:

1) Exchange openers from the wheel tracks with other areas of the drill or cultivator.
2) Maintain hard surfacing on the openers by building up the areas that were hard surfaced at the factory. Detailed instructions on how to do this are shown below. Hard surface welding sticks and hard surface wire can be purchased through your local welding supply store.

Hard Surfacing

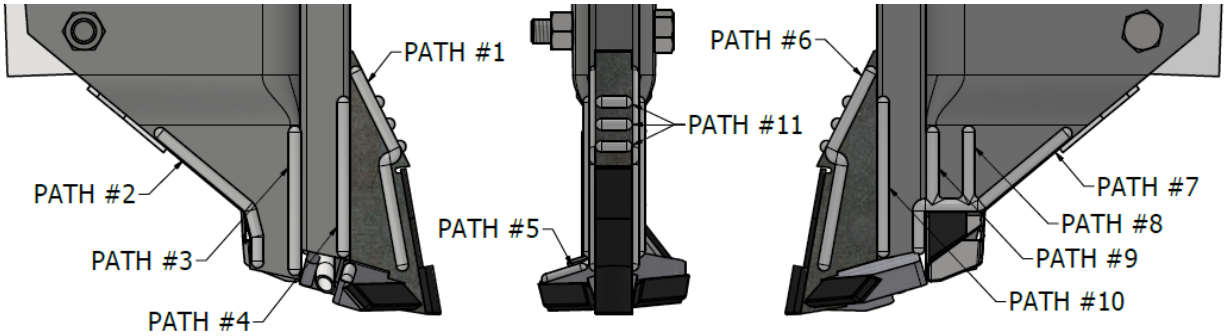

One of the reasons we chose steel to build our openers is the ease with which they can be maintained. The following steps are for re-building the hard surface weld beads:

1) Maintain the hard surfacing on the openers by building up the areas we have hard surfaced in the factory. Clean off the openers and work on at least ten openers at a time. The idea is to minimize the heat build-up in the opener, preventing any damage to the carbide.
2) Follow these steps:
    a. Starting ⅛" away from the carbide, do PATH #1 on all openers.
    b. Then, do PATHS #2 to #4 on the skirting and tube shield of all openers. It may help to clamp a piece of steel inside the boot plate to give backing to the weld and to act as a heat sink.
    c. Next, hold the opener so the wing is flat. Starting ⅛" from the carbide, do PATH #5 on the wing.
    d. Turn the openers over and do PATHS #6 to #10 on the other side using the same method as the first side, staying ⅛" from the carbides.
    e. Finally, hold the opener so the point is facing up. Starting ⅛" away from the carbide, do the PATH #11 on all openers.
3) Atom-Jet Industries regularly performs this process for many customers. Call today for a quote at 1-800-573-5048.